INTO Concept

We make your space work.

INTO Concept, founded by Finnish designers, interior architect Hanna Gullstén and architect Jari Inkinen, is a furniture company that specializes in support space solutions and modular POD meeting rooms.

With more than 30 years of experience in designing functional workspaces, our INTO the Nordic Silence product family has been created to solve various distractions in open-plan offices and educational environments.

Our designs are inspired by the silence of Nordic nature and the colors of the seasons of the year. By following the Nordic tradition of high-quality and functional design, our pods and furniture create comforting and inviting havens to retreat to during the day.

We believe that everyone deserves a functional and healthy working environment.

Designers & Founders

Jari Inkinen

Hanna Gullstén

POD Noate 4hló
Available

INDEX

We make your space work	1
Index	3
Values	4
Sustainability	6
POD Rooms	8
POD characteristics	10
POD PHONE SMALL & POD PHONE	12-14
POD 1 & POD 2	15-17
POD 3	18
POD 4 & POD MAX	19-20
POD add-ons	21
Phone booth seating options	22
POD furniture examples	23-24
POD ROLL characteristics	25-26
POD ROLL & POD ROLL GLASS	27-28
POD ROLL GLASS SMALL	29
How to place your POD rooms	30
Tables & Workstations	
TOP	33
TOP WORK	34
TOP ROUND	35
TOP CURVE	36
FOCUS & ROLL IN	37-38
Seating	39-40
CUBE & CUBE SOLO	41-42
POINT CUP	43
POINT STOOL sofas	44
POINT LOW sofas	45-46
POINT HIGH sofas	47-48
POINT example solutions	49-50
Space dividers	51-52
STORY WALL	53
STORY WALL HIGH	54
STORY WALL LOW	55
STORY WALL example solutions	56
STORY WALL accessories	57-60
STORY WALL active packages	61
HUT	62-63
HUT combining examples	64
Other accessories	
WALL PANEL	65
POINT BOX TABLE	66
Standard materials	67-70
Close-up pictures	71-72
Reference pictures	73-74

CONTACT

INTO Concept Oy
Lemuntie 3-5 C
00510 Helsinki,FINLAND
tel: +358 40 670 7819
contact@intoconcept.com

www.intoconcept.com

INTO Concept

VALUES

Our values guide everything we do — from how we design and manufacture our products to how we collaborate with our clients, partners, and each other. We believe the best spaces are built through open dialogue, shared responsibility, and a true commitment to finding the right solution for every client.

TRUST
We act openly and honestly. We build long-term partnerships and keep our promises. We also speak up and challenge ideas when it helps create better solutions for our customers.

SUSTAINABILITY
We design products and solutions that last in terms of quality, design and environmental impact. We aim to lead the way in creating responsible and flexible solutions that adapt to changing needs.

SOLUTION-ORIENTED
We focus on understanding what our clients really need. We use our expertise to ensure the best possible outcome for the client — even when it requires thinking in new ways.

INTO Concept

SUSTAINABILITY

ENVIRONMENTAL SUSTAINABILITY

Due to our mission to be a pioneer in the sustainable development of the industry, our principle is to create furniture and accessories of such a high quality that they need never be thrown away. Manufactured in Finnish and Baltic factories, our products comply with the principles of sustainable development and general safety and durability requirements.

MATERIALS

All the materials used in INTO furniture are carefully chosen based on their ability to withstand heavy wear. Wood is the primary material used in our products and one hundred percent of the wood materials we use is FSC certified, ensuring responsible and sustainable sourcing. All the materials we use are recyclable and selected with sustainability in mind. You can find our materials at the end of this brochure, on pages 67-70.

SOCIAL SUSTAINABILITY - FURNITURE FOR WELLBEING

Social sustainability is one of four aspects of sustainability. The main concept behind social sustainability is to create successful and functional places that promote wellbeing by understanding what people need from the places they live and work. INTO furniture can reduce the environmental load generated from office layout changes happening due to changing workspace needs. With our furniture solutions, more versatile, flexible, and multi-functional spaces that endure time can be created.

POD ROOMS

INTO the Nordic Silence POD rooms are originally created for real-life interior projects.

INTO POD rooms are designed and developed by interior architect and architect with decades of experience in designing functional spaces.

Why choose INTO POD rooms?

- A selection of 10 different POD rooms and phone booths
- Timeless and refined design, lighting and design create warm and room-like space
- Excellent sound insulation ensures that speech cannot be clearly heard outside
- Reduced use of glass improve privacy and create softer interior acoustics
- All models feature wheels for easy mobility
- Fast and effortless installation without the cost of fixed walls
- PODS can easily be placed next to each other without leaving gaps in the corners to collect dust and dirt

SKATTA

POD CHARACTERISTICS

DESIGN
INTO the Nordic Silence products are designed by our INTO design team in Finland. Clean-lined and smart design makes all INTO the Nordic Silence products timeless and highly adaptable.

QUALITY
INTO POD rooms are known for their quality. All used materials are carefully chosen based on their ability to withstand heavy wear typical to public spaces.

ROOM-LIKE APPEARANCE
INTO POD rooms are designed to look like actual rooms to increase user comfort. Our POD rooms have straight corners so they can be placed next to each other without leaving gaps for dust and dirt to gather. Bigger rooms also have floor lamps to bring extra light and coziness.

ACCESSIBILITY
INTO POD rooms are for everyone. As standard, accessibility has been taken into account with the low doorstep, floor, and door width. There is an option to install a wheelchair ramp.

MODERN AUTOMATION
INTO POD rooms are equipped with a motion detector that automatically starts the ventilation and lighting when you walk into the POD. Automation also shuts down everything when the POD is not in use. Bigger POD rooms also include INTO's control system for boosted ventilation and lights.

WHEELS
POD rooms come with installation wheels to help with POD placement.

ACOUSTICS
Sound reduction in INTO POD rooms is one of the best in the market. PODS' excellent sound-damping properties are achieved with acoustic ceiling panels and acoustic wool in the walls. The walls are covered with sound-absorbing carpet. Together these features create high-quality silent spaces.

CAN BE PLACED ANYWHERE
The adjustable raised flooring system allows POD installation on uneven floor surfaces. The floor is covered with carpet, which can be replaced when needed.

EASY INSTALLATION
INTO POD is a modular, free-standing, and fully enclosed room, which can be installed, taken apart, and relocated. The installation doesn't require separate HVAC -installation - simply plug & play.

INDEPENDENT VENTILATION
A standard POD includes a self-contained ventilation system. There is an option to connect the POD to the building's own ventilation system.

PRIVACY
INTO POD rooms tackle both visual and noise pollution to enhance your focus. Our POD rooms have one big glass window wall, making the PODS more room-like, cozy and private.

HANDEDNESS
POD rooms are available both left and right handed.

POD ROOMS

POD PHONE SMALL

POD PHONE SMALL telephone booth improves privacy by providing silent space for phone calls. Despite its compact size, this telephone booth does not lose the sense of space or its visual protection. POD PHONE SMALL can accommodate a chair.

All POD rooms are available with multiple surface and door materials. Ceiling panels have various color options and the POD rooms are available both right- and left-handed.
Standard materials are displayed in pages 67-70.

Surface: white melamine, door: oak, carpet: medium grey, ceiling panel: light grey.

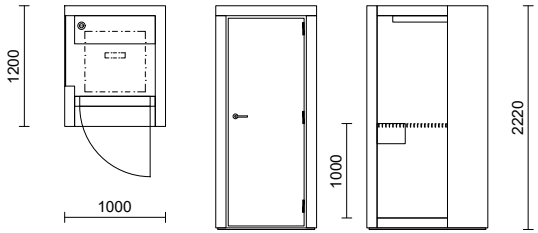

POD ROOMS

POD PHONE

POD PHONE improves privacy when taking phone calls in adaptable workspaces and office environments. Its insulating structure offers excellent acoustic protection from disruptive sounds. POD PHONE can accommodate a chair.

All POD rooms are available with multiple surface and door materials. Ceiling panels have various color options and the POD rooms are available both right- and left-handed.
Standard materials are displayed in pages 67-70.

Surface: black oak, door: American oak, carpet: medium grey, ceiling panel: black.

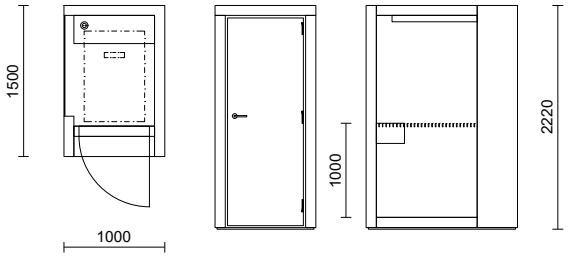

POD ROOMS

POD 1

POD 1 is the number one choice for private phone calls and online meetings and is an ideal workspace for tasks that demand focusing. POD 1 with an added wheelchair ramp works as a telephone booth for wheelchair users.

POD 1 is recommended for 1-2 people.

All POD rooms are available with multiple surface and door materials. Ceiling panels have various color options and the POD rooms are available both right- and left-handed. Standard materials are displayed in pages 67-70.

Surface: pine, door: glass, carpet: light grey, ceiling panel: green.

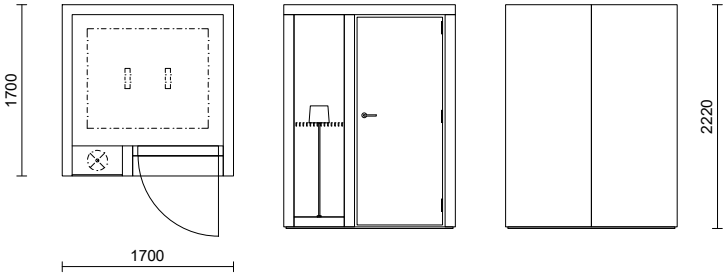

POD ROOMS

POD 2

The POD 2 small meeting room is ideal for 2-4 people for spontaneous but confidential meetings and as an adaptable workspace.

POD 2 is recommended for 2-4 people.

All POD rooms are available with multiple surface and door materials. Ceiling panels have various color options and the POD rooms are available both right- and left-handed.
Standard materials are displayed in pages 67-70.

Surface: white melamine, door: white, carpet: light grey, ceiling panel: green.

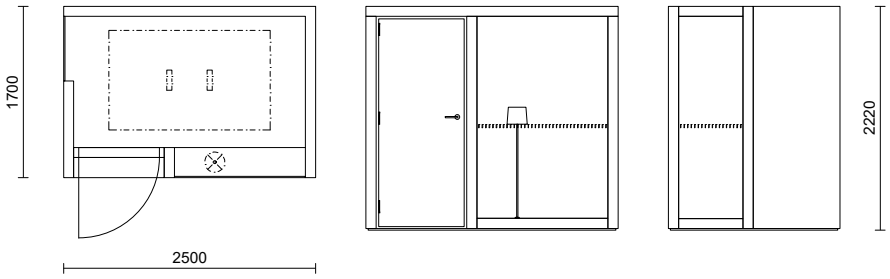

POD ROOMS

POD 3

The POD 3 is a versatile soundproof workspace, ideal for creating a focused environment or serving as a compact meeting room for collaborative sessions.

POD 3 is recommended for 1-3 people.

All POD rooms are available with multiple surface and door materials. Ceiling panels have various color options and the POD rooms are available both right- and left-handed.
Standard materials are displayed in pages 67-70.

Surface: white melamine, door: glass, carpet: dark grey, ceiling panel: green.

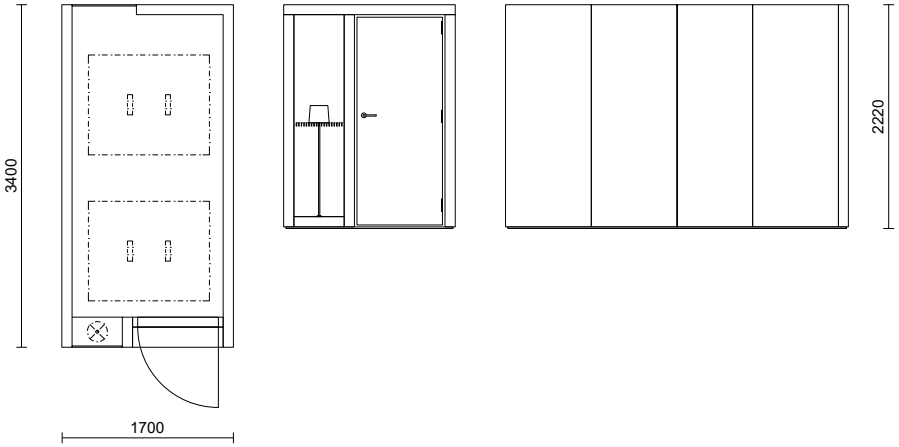

POD ROOMS

POD 4

POD 4 meeting room is perfect for private and confidential meetings as well as an adaptable working space. The acoustic protection in this meeting room is excellent due to its insulating structure.

POD 4 is recommended for 4-8 people.

All POD rooms are available with multiple surface and door materials. Ceiling panels have various color options and the POD rooms are available both right- and left-handed. Standard materials are displayed in pages 67-70.

Surface: American oak, door: glass, carpet: light grey, ceiling panel: dark grey.

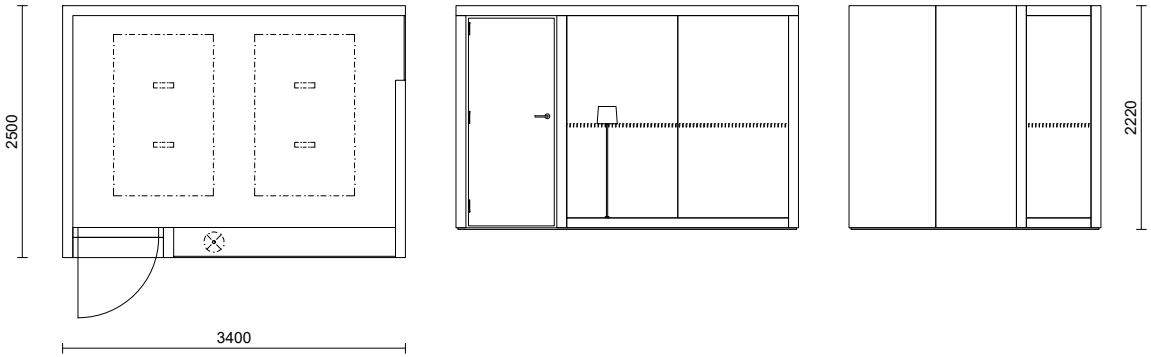

POD ROOMS

POD MAX

POD MAX is a spacious negotiation room, offering an ideal setting for larger meetings and discussions. Its optimized sound environment ensures a productive and pleasant atmosphere.

POD MAX is recommended for 8-10 people.

All POD rooms are available with multiple surface and door materials. Ceiling panels have various color options and the POD rooms are available both right- and left-handed. Standard materials are displayed in pages 67-70.

Surface: white melamine, door: American oak, carpet: dark grey, ceiling panel: blue.

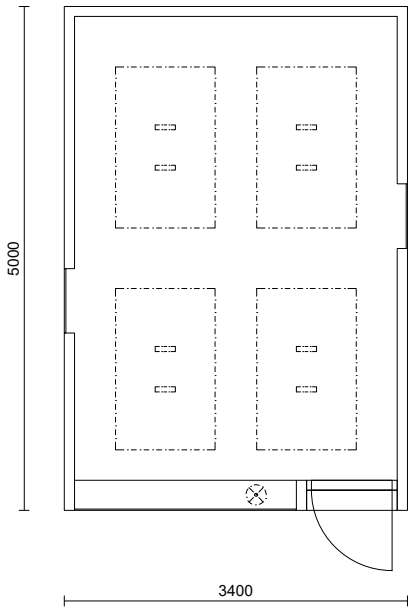

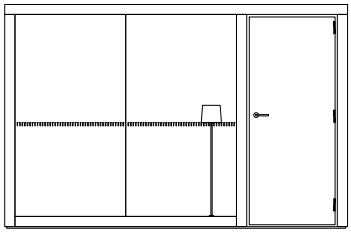

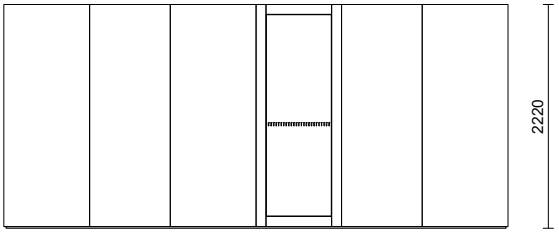

ADD-ONS FOR POD ROOMS

POD PANELS

INTO POD PANELS help you to create acoustic-friendly environments outside the POD rooms. They come with a quick and easy fastening system and do not leave any traces on POD surfaces. Multiple color options available.

DISPLAY BOX

DISPLAY BOX is a practical accessor specially designed to hold the screen in the POD meeting rooms. Furthermore, this wall solution makes it possible to hide the disruptive cables and remote control.

Please note that the screen and the wall mount brackets are not included.

ACCESSIBILITY SET

A wheelchair ramp can be added to all POD 1-4, POD MAX. There is also an option to add several other features, such as:

- Reservation for automatic door
- Automatic door closer
- Hydraulic door closer
- Kick-plates for door and/or walls
- Vertical and/or horizontal bar handles

OTHER ADD-ONS

- Air cooling device
- Clothing hook
- Eletronical lock system
- Booking system
- Smart glass
- USB charger
- Extra sockets
- AV systems (web camera, microphone)

SEATING OPTIONS FOR PHONE BOOTHS

STOOL WITH BACKREST

Height adjustable swivel chair with back and leg rest, perfect for either POD PHONE or POD PHONE SMALL. Different colour options upon request.

ADJUSTABLE STOOL

Height adjustable elegant stool. Stirdy structure, perfect for either POD PHONE or POD PHONE SMALL. Different colour options upon request.

SOFT STOOL

Elegant soft stool. Stirdy structure, high quality fabrics perfect for either POD PHONE or POD PHONE SMALL. Different colour options upon request.

FURNITURE EXAMPLES FOR INTO POD ROOMS

POD PHONE

PHONE ALONE

A classic and timeless phone booth that retains privacy and prevents sound from escaping.

FURNITURE

Picture B: soft stool

A: POD PHONE SMALL

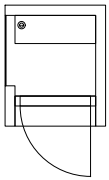

B: POD PHONE

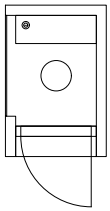

POD 1

PRIVATE WORK

Private workspace for 1 person when peace and quiet are needed for work that requires focus.

FURNITURE

Picture A: POINT LOW S, TOP LIFT LOW S

Picture B: TOP WORK, office chair

A: POD 1

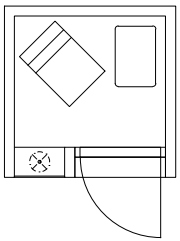

B: POD 1

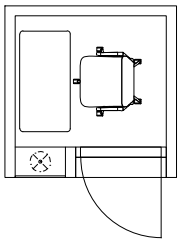

FURNITURE EXAMPLES FOR INTO POD ROOMS

POD 2

THINK TANK

Creative space for 2 - 3 people. Furnished with cozy sofas and a height-adjustable table.

FURNITURE

Picture A: 2 x POINT LOW M,
TOP LIFT LOW S

Picture B: 2 x POINT LOW S,
POINT LOW M, TOP L

A: POD 1

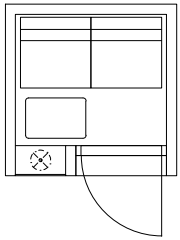

B: POD 2

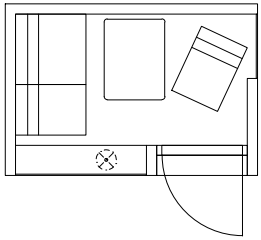

POD 4

TEAMWORK

A meeting room for teamwork. Furnished with sofas and side tables, as well as a display stand to support online meetings.

FURNITURE

Picture A: 4 x POINT LOW M,
POINT LOW CORNER,
2 x TOP LIFT LOW CURVE L,
DISPLAY BOX

A: POD 4

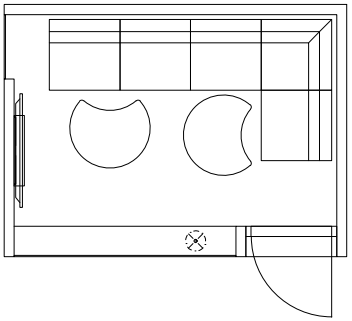

POD ROLL CHARACTERISTICS

POD ROLLS
POD ROLLS are ideal as adaptable space dividers and ad-hoc meeting points between breakout areas and office spaces. They can also be used in entrance halls to create sheltering workspaces for visitors. POD ROLLS are modular and movable freestanding rooms, which can be relocated by only moving them with bare hands. The installation doesn't require a separate HVAC installation -simply plug & play.

The seating measurements of the sofas are ergonomic and support healthy working positions.

POD ROLL ACOUSTICS
POD ROLL's sound-friendly qualities are achieved with the acoustic ceiling and wall panels, which are covered with high-class acoustical upholsteries. During test conditions, the POD ROLLS have good speech intelligibility. An optional glass door provide even better comfort.

MODERN AUTOMATION
INTO POD rooms are equipped with a motion detector that automatically starts the possible ventilation and lighting when the POD is occupied.
Automation also shuts down everything when the POD is not in use.

FLOOR STRUCTURE
POD ROLL has wheels so that it can be easily moved and turned around on the premises. The floor covering is carpet, which can be replaced if needed.

COLOR OPTIONS FOR EXTERIOR
Standard color finishing options are white and grey. Customized colors and veneers are possible to the client's choice.

OPTIONS FOR INTERIOR
There is a range of fabrics with a variety of color options creating a pleasant acoustic environment to work in.

SOCKETS AND SCREEN HOLDER
POD ROLLS have sockets integrated into the tabletop as well as under the table. All POD ROLLS come with a screen holder.

VENTILATION
POD ROLLS do not need ventilation as they are open and semi-open solutions. POD ROLL GLASS and POD ROLL GLASS SMALL have independent ventilation.

GLASS WALL
Laminated sound control glass wall includes INTO stripe manifestation design as standard delivery. Manifestation design can be tailored to match the client's brand identity when requested.

POD ROLL

POD ROLL is a smart and compact solution for spontaneous meetings and independent work. POD ROLL includes built-in seating, lighting, electrical socket on the tableop and a screen holder. Because of its wheels, it can be easily moved and turned around within the premises.

Standard materials are displayed in pages 67-70.

Surface: white melamine, carpet: dark grey.

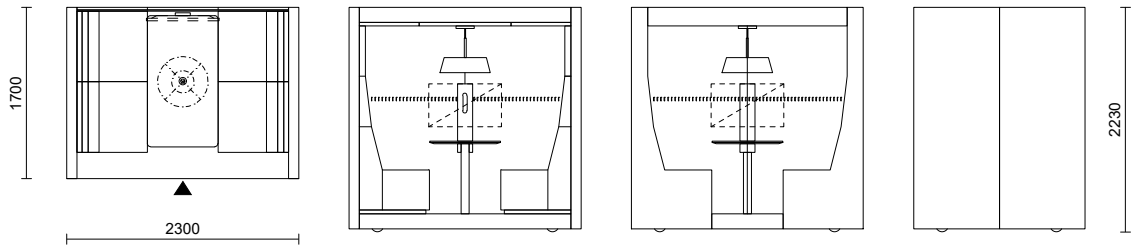

POD ROLL

POD ROLL GLASS

POD ROLL GLASS is perfect for ad hoc meetings, work that needs focusing, and as a space divider and added seating space. Due to its wheels, POD ROLL GLASS can be easily moved and turned around within the premises. It includes built-in seating, lighting, electrical socket on the tableop and a screen holder.

Standard materials are displayed in pages 67-70.

Surface: white melamine, carpet: dark grey, door: glass.

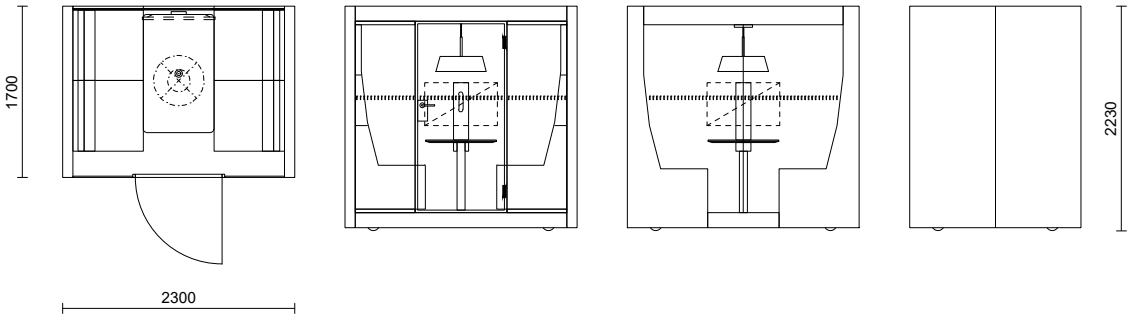

POD ROLL

POD ROLL GLASS SMALL

POD ROLL GLASS SMALL is a quiet meeting pod for two people, ideal for spontaneous meetings. Due to its wheels, POD ROLL GLASS SMALL can be easily moved and turned around within the premises. It includes built-in seating, lighting, electrical socket on the tableop and a screen holder.

Standard materials are displayed in pages 67-70.

Surface: pine, carpet: dark grey, door: glass.

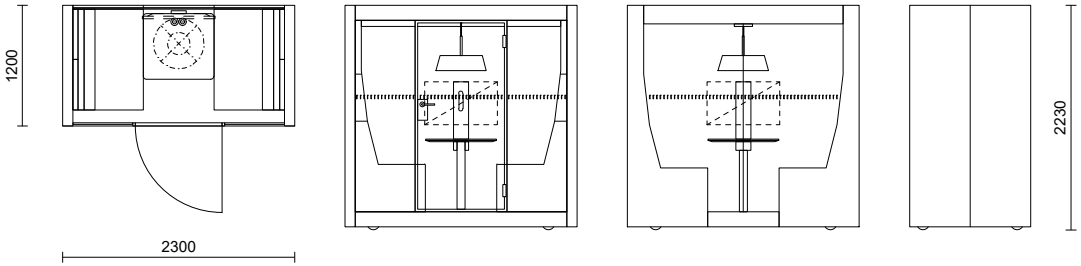

HOW TO PLACE YOUR POD ROOMS

INTO the Nordic Silence furniture concept was created to heal traditional open offices having challenges with noise to more focus-minded and functional working environments. INTO POD rooms increase both working comfort and productivity by providing cozy room-like acoustic and visual shelters. The most important thing in placing POD rooms is to place them close to the users so that they can be easily accessed. Especially important with phone booths is to place them into central areas so that they can be entered quickly.

POD rooms are meant to be used. You should have enough PODs of different sizes to serve various needs. POD PHONE telephone booths are ideal for quick calls. POD 1 & POD 2 are compact solutions for spontaneous meetings and independent work. PODs 2-4 are optimal for collaboration and teamwork, and POD 4 is a perfect meeting room.

In summary:

- Close to the users
- Phone booths to the central areas
- Right amount
- Diverse sizes
- POD rooms can be used as space dividers

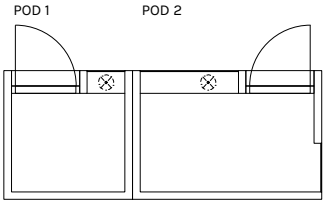

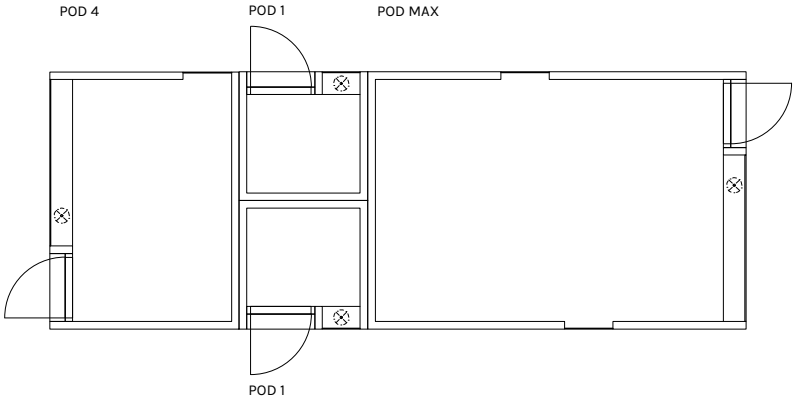

POD rooms can be positioned against each other due to their smart design. A straight-lined design means no gaps to gather dust or dirt.

TABLES & WORKSTATIONS

INTO tables and workstations are created to increase functionality and diverse usage of different spaces. They are perfect for entry halls, office spaces, educational environments, and private homes.

Why choose INTO tables and workstations?

- Perfect as drop-in workspaces.
- Use them to create spaces for quiet, individual work, or as space dividers.
- These ergonomic work stations can be used as a shelter against visual and noise pollution.

First and foremost, our tables and workstations enable flexible space planning for all needs.

TOP TABLES

TOP tables are visually slender yet structurally steady table solutions that enable ergonomic and flexible work. Table sizes go from small laptop tables up to bigger working desks. Available with either fixed leg or height-adjustable leg.

Standard materials are displayed in pages 67-70.

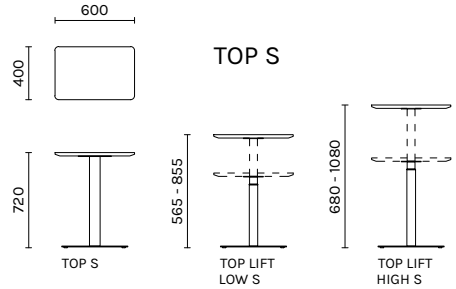

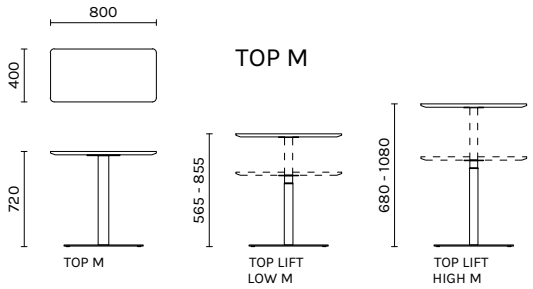

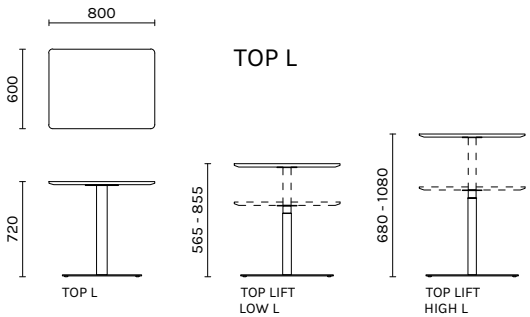

TOP WORK

TOP WORK table is a visually slender yet structurally steady desk designed for ergonomic and flexible work. It is height-adjustable with a gas mechanism, so you can easily switch between sitting and standing.

Standard materials are displayed in pages 67-70.

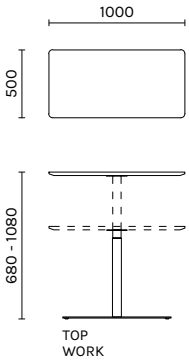

TOP WORK

TOP ROUND TABLES

TOP ROUND TABLES are visually slender yet structurally steady table solutions that enable ergonomic and flexible work. Table sizes range from compact laptop, sofa or side tables to larger work desks. Available with either fixed leg or height-adjustable leg.

Standard materials are displayed in pages 67-70.

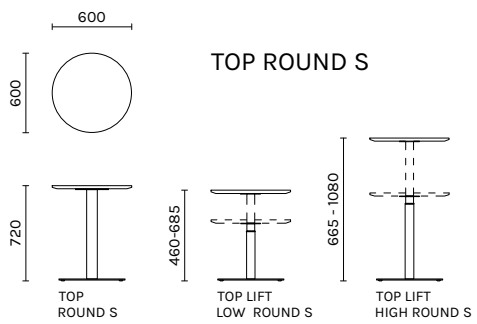

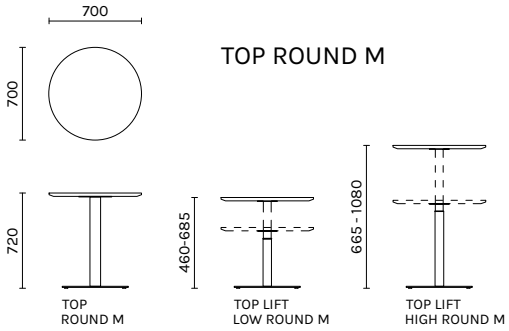

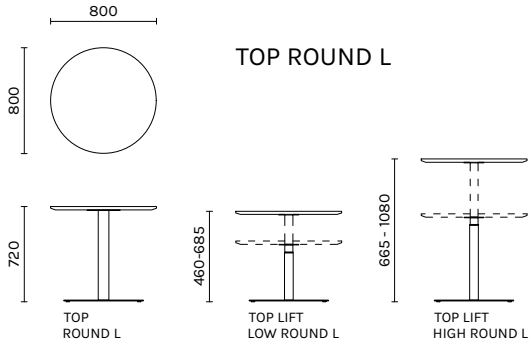

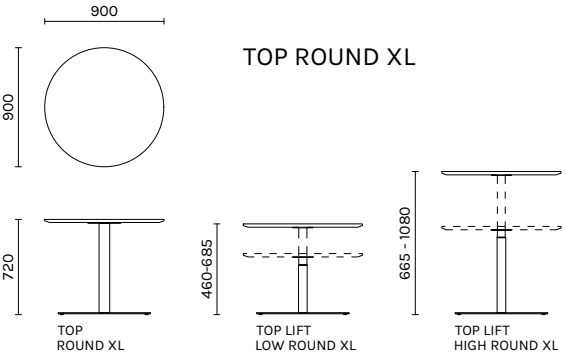

TOP CURVE TABLES

TOP CURVE TABLES are visually slender yet structurally steady table solutions that support ergonomic and flexible work. Their curved shape ensures a comfortable working position. The tables come in two different sizes. Available with either fixed leg or height-adjustable leg.

Standard materials are displayed in pages 67-70.

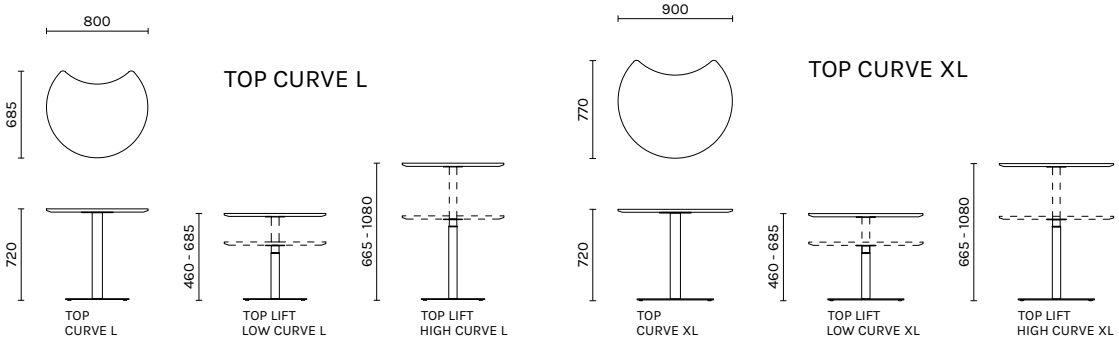

FOCUS

This private workstation on wheels provides both visual haven and true peace of mind while working. It has fixed lighting as well as an electrical socket to charge your electrics.

Standard materials are displayed in pages 67-70.

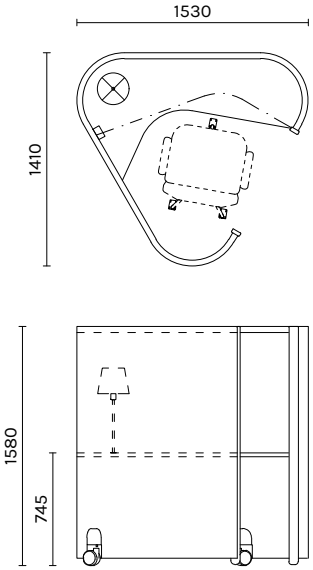

ROLL IN

ROLL IN is a workstation on wheels that offers a handy haven for those who need to focus in private during their workday. It includes fixed lighting, a built-in electrical socket as well as a hook to hold a bag.

Standard materials are displayed in pages 67-70.

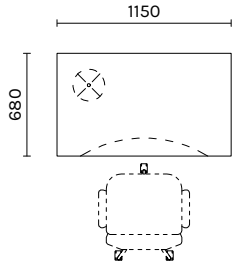

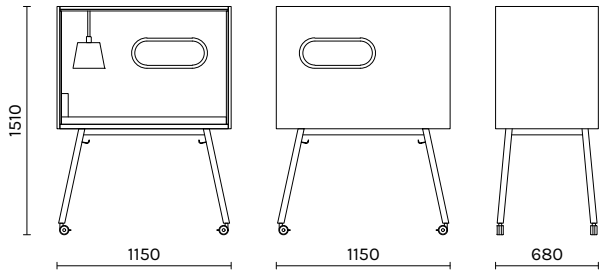

SEATING

INTO seating furniture is created to bring people together and to support collaboration.

Our selection provides inviting solutions for working and learning environments.

Reasons to choose INTO seating furniture:

- Seating furniture is made for work and designed to withstand heavy wear typical to public spaces.
- Ergonomics have been taken into account with seating measurements that bases on standard office chair heights and sturdy structure to support healthy working positions.
- Electronical sockets can be integrated.
- Durable and comfortable materials that endure time.

Above all, we made things easy for you: choose a ready-made package solution or create the couch combination for your individual needs.

CUBE

CUBE sofa is designed for lobbies and office spaces, providing both acoustic and visual privacy. It is recommended to place two sofas facing each other, creating a comfortable and acoustically pleasant environment.

Standard materials are displayed in pages 67-70.

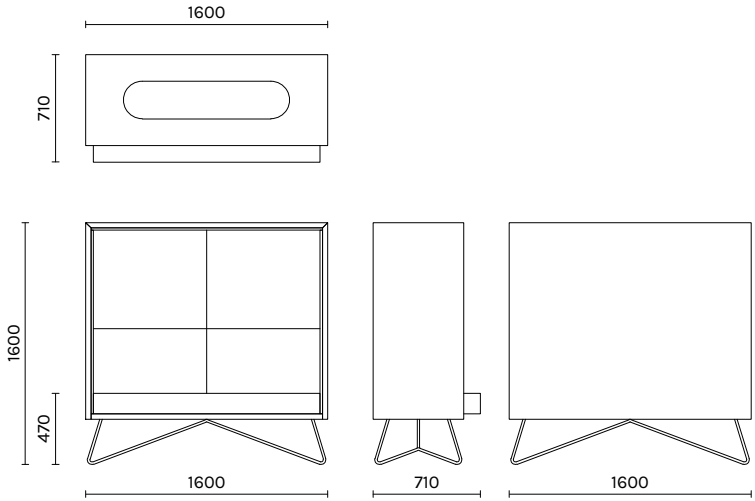

Option to add an armest with a socket.

CUBE SOLO

CUBE SOLO is a rotating and sheltering chair for one person. It provides visual privacy within an acoustically friendly and comfortable environment. There is an opening in the ceiling for natural light to shine in.

Standard materials are displayed in pages 67-70.

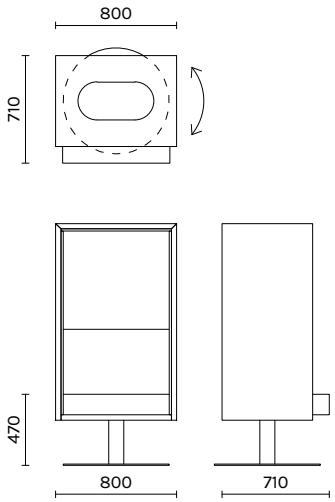

Option to add an armest with a socket.

POINT CUP

POINT CUP office booth is a sound-friendly 360-degree furniture solution that offers a comfortable space for teamwork and video conferences. The sofa modules of POINT CUP are upholstered with fabric and the backside of the screen wall is felt. The table includes an integrated electrical socket.

Standard materials are displayed in pages 67-70.

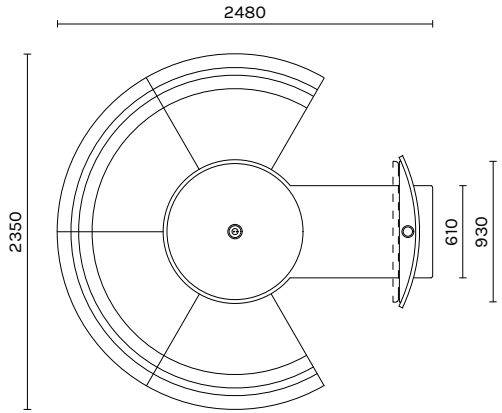

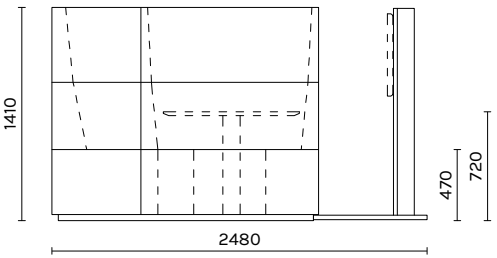

POINT STOOL SOFAS

POINT STOOL sofa modules are flexible furniture solutions for lobbies, break areas and meeting rooms. They are made of durable and comfortable materials and their modular design allows you to combine them in many different ways.

All POINT sofas are available with wheels and height adjustable legs.

Standard materials are displayed in pages 67-70.

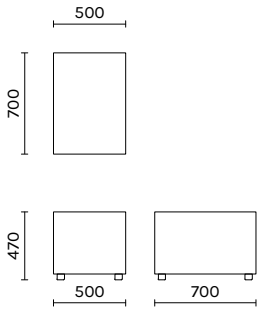

POINT
STOOL S

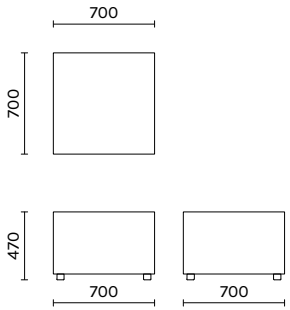

POINT
STOOL M

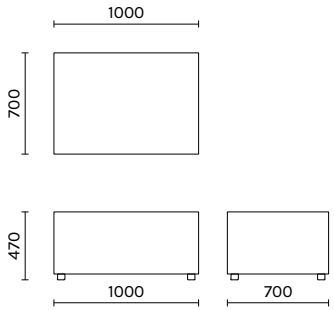

POINT
STOOL L

POINT LOW SOFAS

POINT LOW sofa modules are flexible furniture solutions for lobbies, break areas and meeting rooms. They are made of durable and comfortable materials and their modular design allows you to combine them in many different ways.

All POINT sofas are available with wheels and height adjustable legs.

Standard materials are displayed in pages 67-70.

SEATING

POINT LOW SOFAS

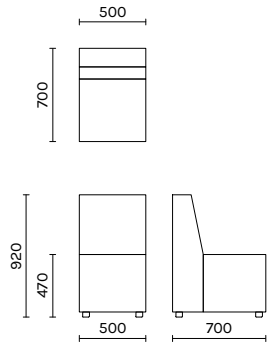

POINT
LOW S

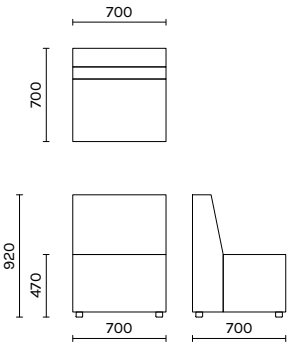

POINT
LOW M

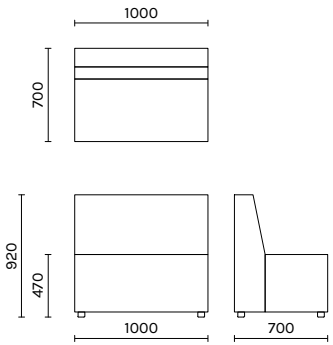

POINT
LOW L

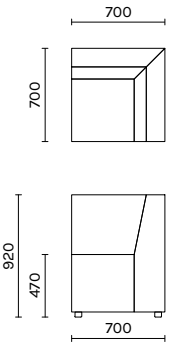

POINT
LOW CORNER

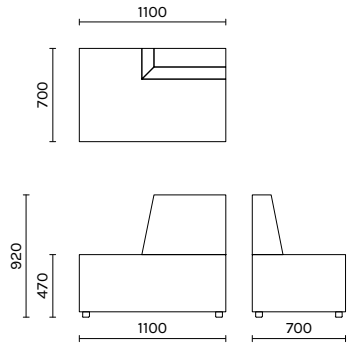

POINT
LOW OUTER CORNER LEFT

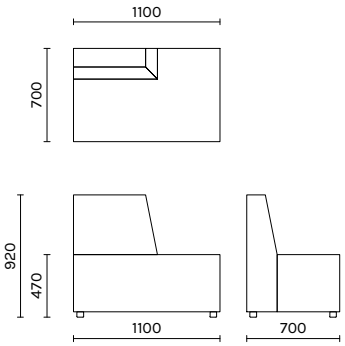

POINT
LOW OUTER CORNER RIGHT

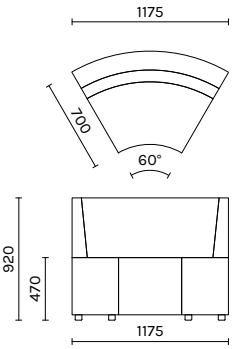

POINT
LOW CURVE IN

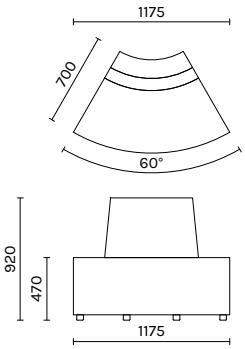

POINT
LOW CURVE OUT

POINT HIGH SOFAS

POINT HIGH sofa modules are flexible furniture solutions for lobbies, break areas and meeting rooms. They are made of durable and comfortable materials and their modular design allows you to combine them in many different ways.

All POINT sofas are available with wheels and height adjustable legs.

Standard materials are displayed in pages 67-70.

SEATING

POINT HIGH SOFAS

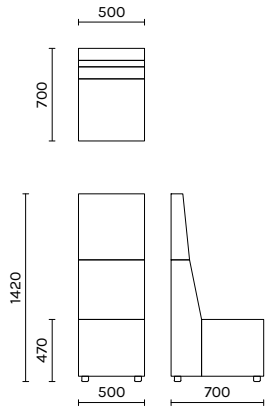

POINT
HIGH S

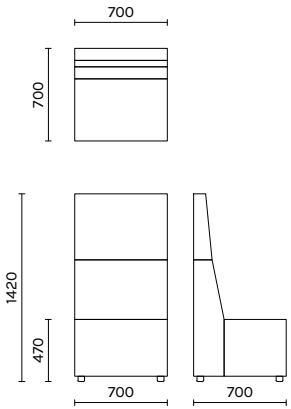

POINT
HIGH M

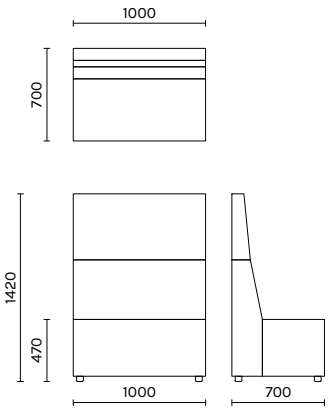

POINT
HIGH L

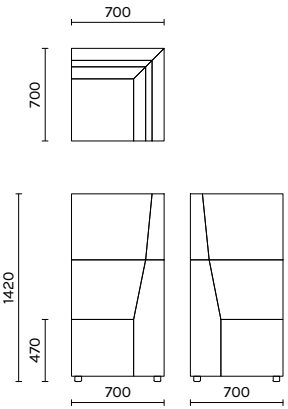

POINT
HIGH CORNER

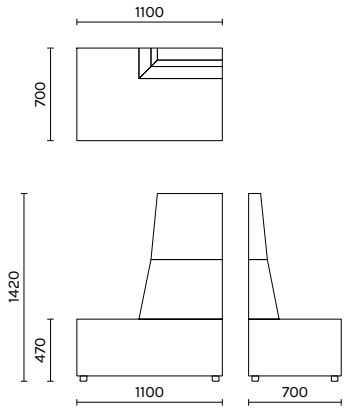

POINT
HIGH OUTER CORNER LEFT

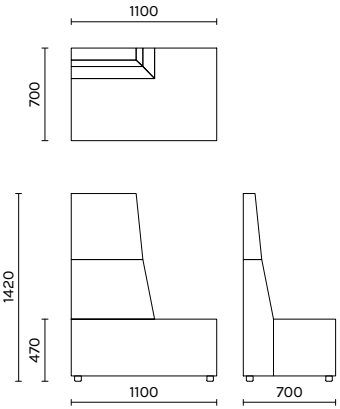

POINT
HIGH OUTER CORNER RIGHT

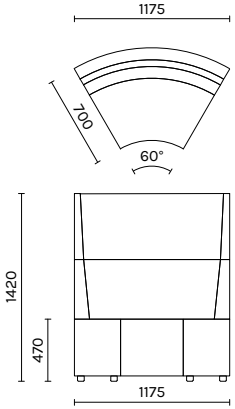

POINT
HIGH CURVE IN

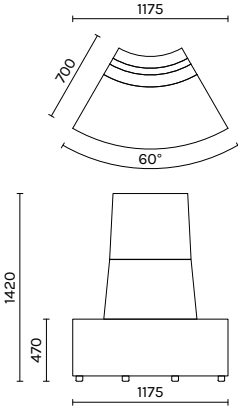

POINT
HIGH CURVE OUT

EXAMPLES OF POINT SOFA SETS

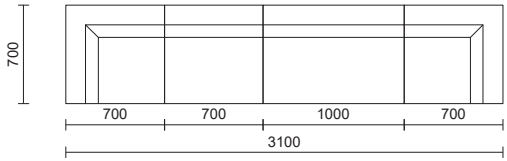

POINT LOW CORNER x 2, POINT LOW M, POINT LOW L with socket

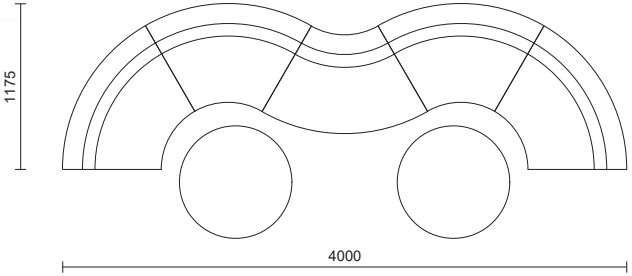

POINT HIGH CURVE IN x 4, POINT HIGH CURVE OUT x 1,
TOP ROUND tables x 2

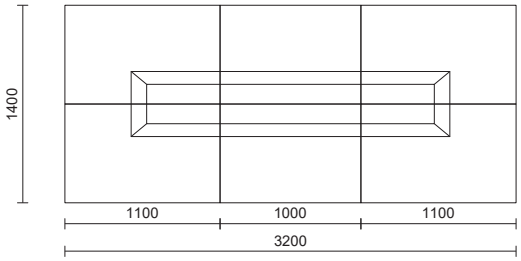

POINT LOW OUTER CORNER LEFT x 2, POINT LOW OUTER CORNER RIGHT x 2, POINT LOW L x 2

SPACE DIVIDERS

Our acoustic space dividers create a pleasant sound environment, divides spaces, provides shelter and space for creativity.

Why choose INTO space dividers?

- Beautiful timeless design fits any space.
- The space dividers can be moved and rotated around the premises, STORY WALLs have wheels underneath.
- Durable and comfortable materials that endure time.
- Modular solutions that can be combined in many ways. With space dividers you can make room like areas.

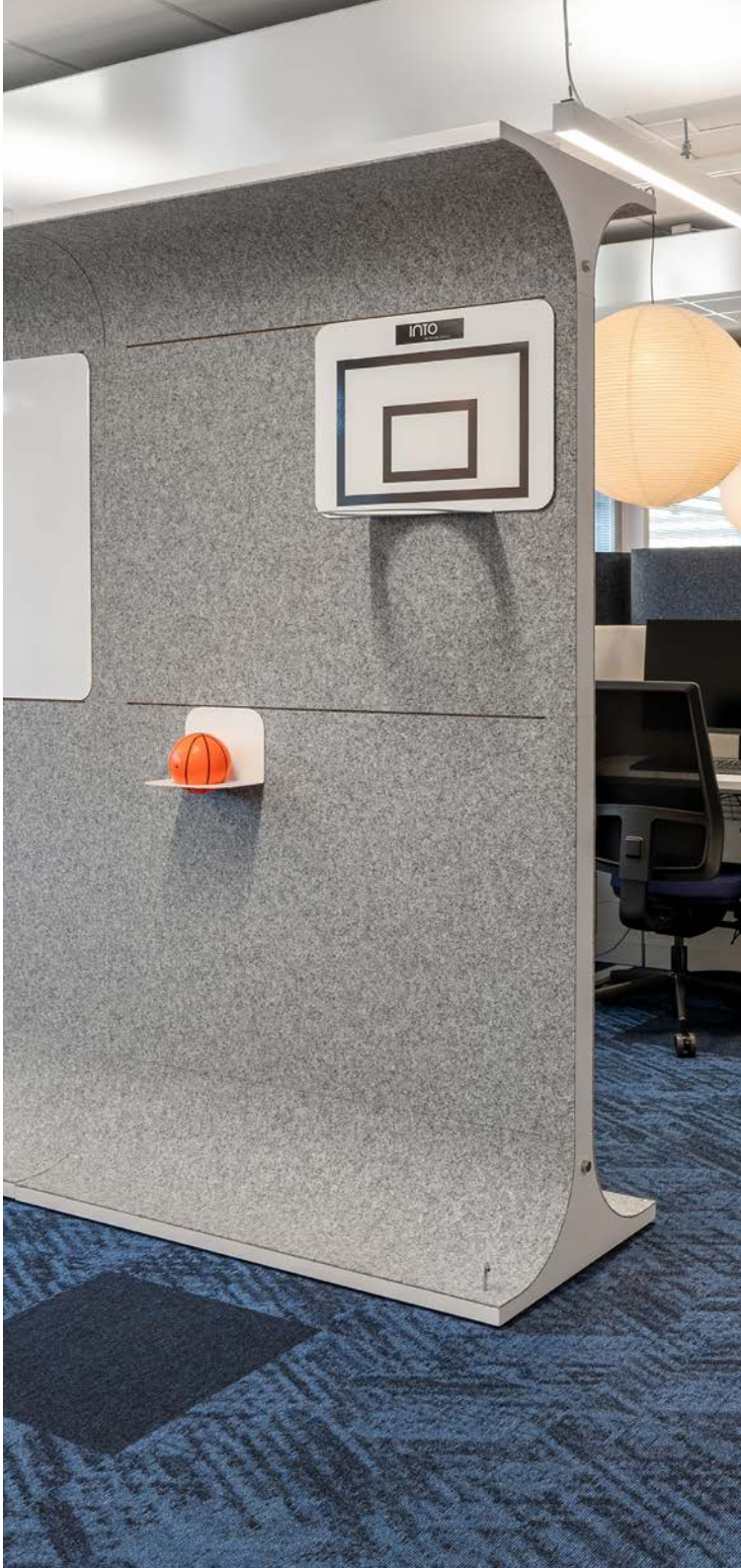

INTO

STORY WALL

The multi-purpose STORY WALL is an acoustical space divider that adapts to whatever space you're in. STORY WALL can be conveniently moved and turned around because of the wheels underneath. The walls attach to each other easily with strong magnets.

Option for add-on features such as whiteboard and tv bracket to make your STORY WALL a multi-functional idea wall.

Standard materials are displayed in pages 67-70.

STORY WALL accessories are displayed in pages 57-60.

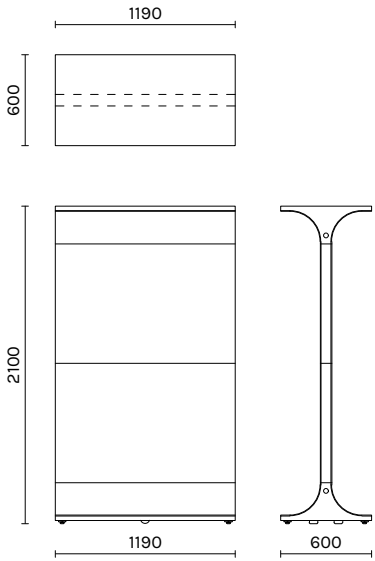

STORY WALL HIGH

Standing taller than the original STORY WALL space divider, STORY WALL HIGH offers enhanced privacy and sound absorption. Its modular design allows adjacent wall units to be effortlessly connected through built-in fittings, making it easy to create room-like areas within environments.

Option for add-on features to make your STORY WALL a multi-functional idea wall.

Minimum order quantity 2 pieces.

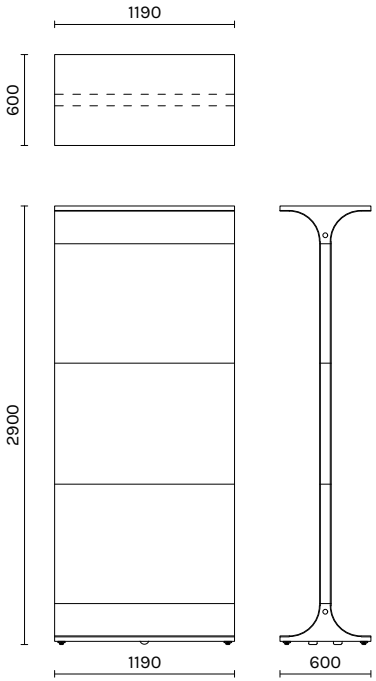

Standard materials are displayed in pages 67-70.

STORY WALL accessories are displayed in pages 57-60.

SPACE DIVIDERS

STORY WALL LOW

STORY WALL LOW is child-friendly acoustic space divider with felt. It ensures visibility for adults while providing a safe and comfortable way to divide spaces. The units connect easily via integrated fittings, and built-in wheels allow effortless movement and rotation.

Option for add-on features to make your STORY WALL a multi-functional idea wall.

Standard materials are displayed in pages 67-70.
STORY WALL accessories are displayed in pages 57-60.

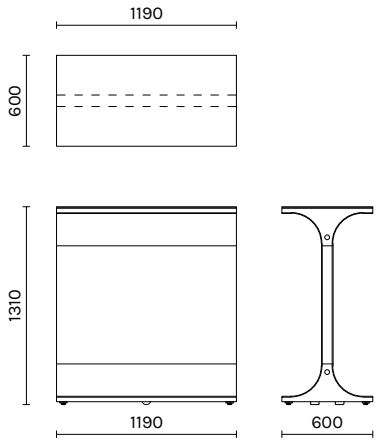

STORY WALL EXAMPLE SOLUTIONS

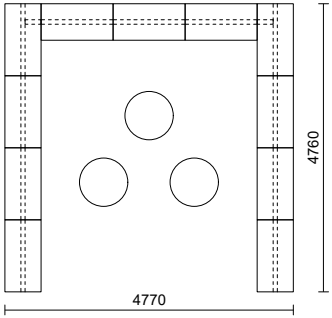

TOP LIFT HIGH ROUND L x 3, STORY WALL x 11, CORNER PIECE x 2, WHITEBOARD x 8

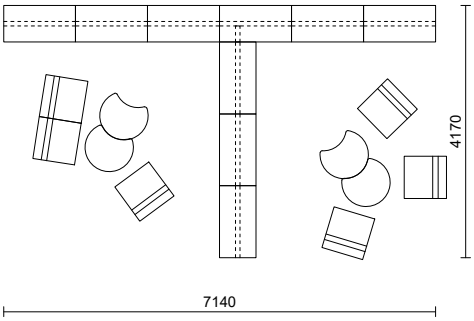

TOP CURVE L x 4, STORY WALL x 9, CORNER PIECE x 1, WHITEBOARD x 4, POINT LOW M x 6

STORY WALL ACCESSORIES

WHITEBOARD

Convert your STORY WALL into an inspiration board with whiteboards. The whiteboard is easy to attach to the STORY WALL with a magnet, and multiple whiteboards can be attached side by side. There is an option for 1-4 whiteboards as add-on pieces.

Size for one whiteboard is 1120 x 790 mm.

MARKER TRAY

Make working more efficient with a handy STORY WALL marker tray to place under the whiteboard.

Size for one marker tray is 1119 x 101 mm.

TV BRACKET

Turn your space divider into a stylish screen holder.
TV Bracket comes with a marker tray that has an extend cord holder.

Holds a screen of maximum "42.

STORY WALL ACCESSORIES

MAGAZINE HOLDER

Place your magazines and brochures on display in the STORY WALL magazine holder.

Size for one magazine holder is 215 x 305 mm. holder is 1120 x 790 mm.

DARTBOARD

Take a break from work and play with STORY WALL dartboard. The dartboard is easily attached to the STORY WALL with a magnet and includes five darts.

Size for one dartboard is 1120 x 790 mm.

BASKETBALL HOOP

Make your office or school environment more fun with STORY WALL basketball hoop. Basketball hoop comes with one small basketball.

Size for one basketball hoop is 559 x 395 mm.

STORY WALL ACCESSORIES

BASKETBALL HOLDER

Conveniently place your small basketball in the STORY WALL basketball holder.

Size for one basketball holder is 215 x 150 mm.

SHORT SHELF

Place your items and decorations on STORY WALL short shelf.

Size for one short shelf is 560 x 240 mm

LONG SHELF

You can use STORY WALL long shelf to display your items, plants and decorations.

Size for one long shelf is 1118 x 241 mm.

STORY WALL ACCESSORIES

SHORT COAT HANGER

Hang your clothes and bags on STORY WALL short coat hanger.
The short coat hanger has two jacket hooks.

Size for one short coat hanger is 215 x 151 mm.

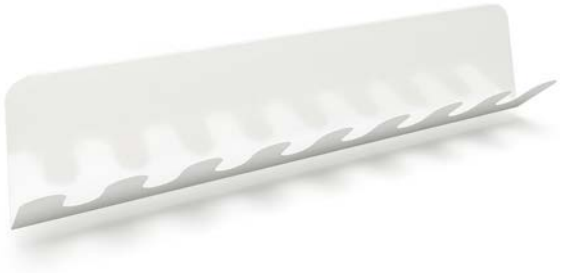

LONG COAT HANGER

Hang your clothes and bags on STORY WALL long coat hanger.
The long coat hanger has nine jacket hooks.

Size for one long coat hanger is 1120 x 790 mm.

CUP HOLDER

Free your desk from clutter and place your cups on STORY WALL cup holder. Small cup holder holds two cups.

Size for one cup holder is 215 x 149 mm.
The diameter of the hole is 70 mm.

STORY WALL ACTIVE PACKAGES

STORY WALL DRAW

The STORY WALL active wall consists of one basic wall element and various accessories. The draw package includes a whiteboard and marker tray,

STORY WALL HOOP

The STORY WALL active wall consists of one basic wall element and various accessories. The draw package includes a whiteboard and marker tray,

STORY WALL AIM

The STORY WALL active wall consists of one basic wall element and various accessories. The draw package includes a whiteboard and marker tray,

SPACE DIVIDERS

HUT

HUT is a modular design solution that brings calmness to open spaces. Wall panels provide added visual privacy, and the modular design allows the solution to be replicated and adapted to different environments.

Standard materials are displayed in pages 67-70.

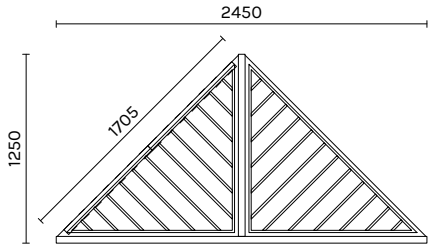

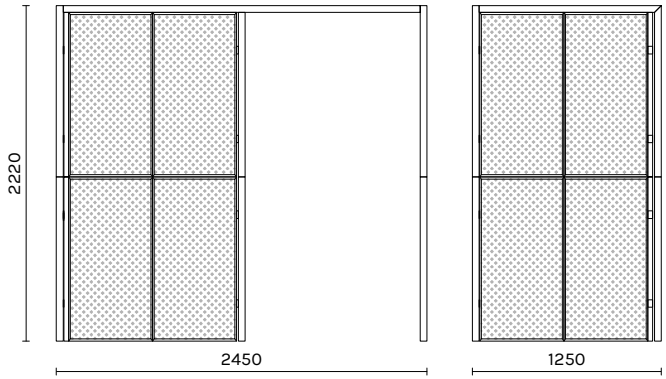

SPACE DIVIDERS

HUT - WALL PANELS

HUT is a modular design solution comes with one small wall panel. Additional wall panels can be added.

SMALL

W1705 x H2220 mm

LONG

W2450 x H2220 mm

SPACE DIVIDERS

HUT - COMBINING EXAMPLES

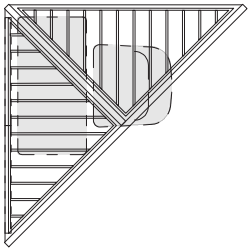

HUT x 1

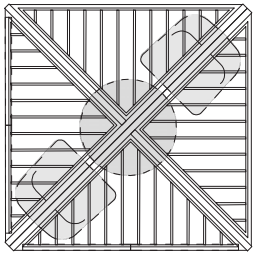

HUT x 2

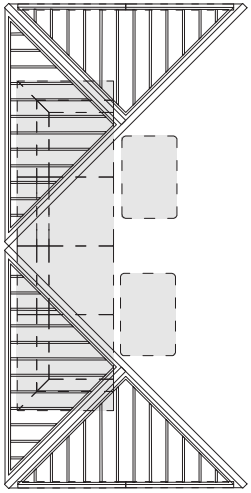

HUT x 2

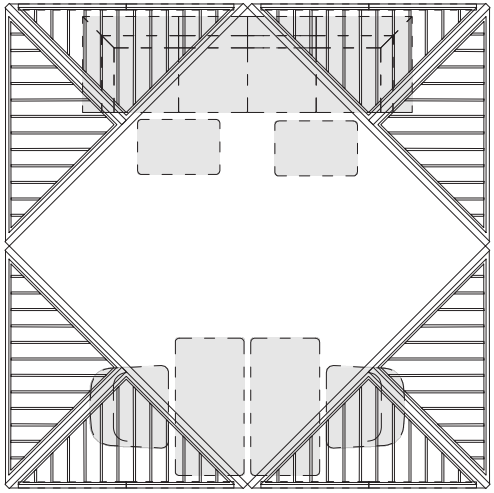

HUT x 4

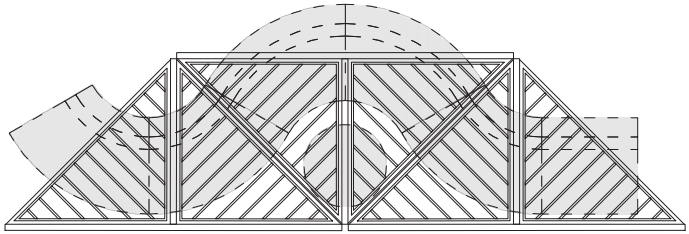

HUT x 3

OTHER ACCESSORIES

WALL PANEL

The wall panels can be easily mounted to existing walls, providing a simple solution to enhance acoustics in any space. In addition to improving sound quality, they add a vibrant touch of color into the environment.

Standard materials are displayed in pages 67-70.

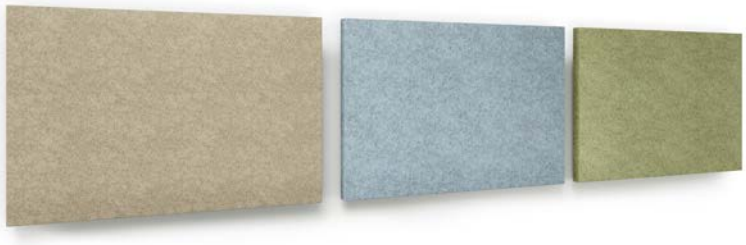

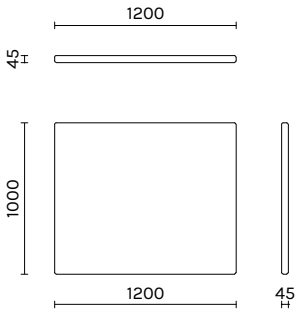

OTHER ACCESSORIES

POINT BOX TABLE

POINT BOX TABLE is an add-on side table for POINT sofas, providing extra surface and storage space. It includes a table lamp and a power socket, bringing both function and cozy atmosphere.

Standard materials are displayed in pages 67-70.

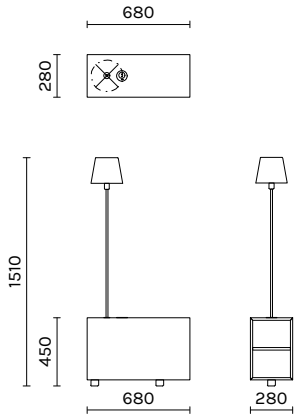

STANDARD MATERIALS

SURFACE FINISHES: PODS, ROLL IN

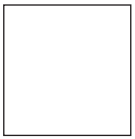
White
melamine

Dark grey
melamine

Pine
veneer

American oak
veneer

Black oak
veneer

DOOR OPTIONS: PODS

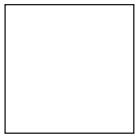
White
painted

American oak

Clear glass 10 mm

comes with white door panels

CARPETS: PODS

FLETCO: Ex-dono Quartet

393300

393340

393350

393120

393260

393450

393550

393660

393750

393850

STANDARD MATERIALS

FABRICS: POD ROLLS, POINT sofas, POINT CUP, CUBE, CUBE SOLO

GABRIEL: Cura

HUT PANELS

WANTED: Halo

238 White

STANDARD MATERIALS

GABRIEL: SOUL - Panel fabric for ROLL IN, POD PANELS, POD CEILING PANELS, WALL PANELS

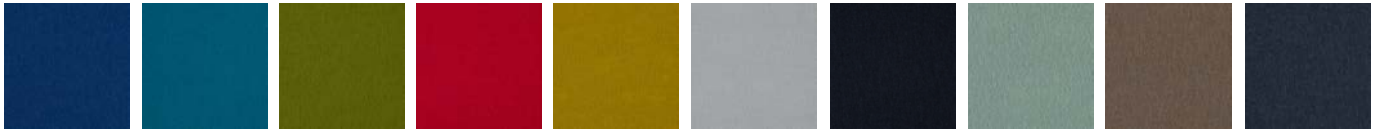

66104 67039 68131 64086 62059 61196 60182 68128 61199 60099

FELT: FOCUS, STORY WALL, POINT CUP

FILZFABRIC: Fulda Fit

37 61 69 52 75 85 66 63 16

TABLE FINISHES: TOP tables, POINT BOX TABLE

NCS S 0500-N Structural

Oak veneer

Pine veneer

TABLE STEEL TUBE BASE: TOP tables

RAL 9016 White

RAL 9005 Black

Black or white laminate or nano-laminate as an alternative.

HUT SLATS

Oiled pine

HUT STEEL BASE

RAL 9016 White

RAL 9005 Black

RAL 6002 Forest green

INTO Concept

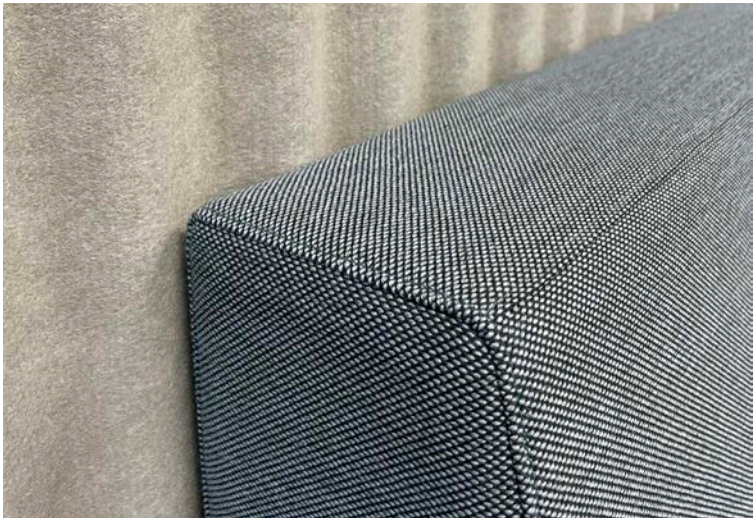

INTO
Concept

INTO Concept

INTO Concept

INTO the Nordic Silence

www.intoconcept.com

contact@intoconcept.com

INTO Concept reserves a right to make changes to the product portfolio and alter technical specifications without notice. Batch to batch variations may occur within commercial tolerance.

Front cover reference picture:
Trimble Headquarters, Finland

Back cover reference picture:
Finance company, Finland

¨1/2026